2947 + GS38

2947- **

		12	24
Voltage	V	12	24
Power Output	W	3.72	4.02
Rated Torque	mNm	6.00	6.11
Rated Speed	r/min	3,577	3,755
Rated Current	mA	301	161
No load Speed	r/min	4,392	4,594
No load Current	mA	68	35
Torque Constant	mNm/A	25.59	47.94

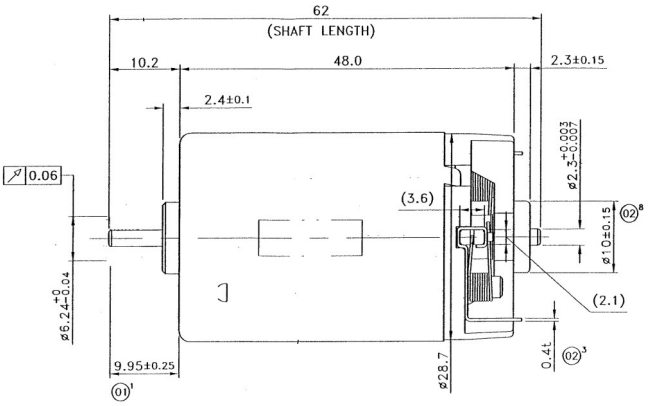

GS38.****

	Ratio	Effic %	Max Torque Cont. (Nm)	L1 (mm)
GS38.0018	18:1	74	0.2	21.10
GS38.0030	30:1	74	0.2	21.10
GS38.0060	60:1	67	0.3	24.00
GS38.0100	1051	67	0.6	24.00
GS38.0200	210:1	61	0.6	26.70
GS38.0500	500:1	55	0.6	26.70
GS38.0900	750:1	55	0.6	26.70

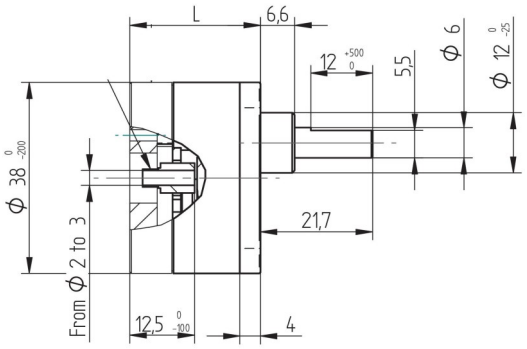

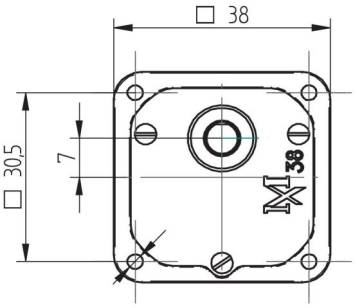

2947-** + GS38.****

	Rated Torque	Ratio	Efficiency	Approx Torque Nm	12v RPM	24v RPM
2947-** + GS38.0018	22	18	0.74	80 mNm	199	209
2947-** + GS38.0030	22	30	0.74	133 mNm	119	125
2947-** + GS38.0060	22	60	0.67	241 mNm	60	63
2947-** + GS38.0100	22	105	0.67	422 mNm	34	36
2947-** + GS38.0200	22	210	0.61	767 mNm	17	18
2947-** + GS38.0500	22	500	0.55	1650 mNm	7	8
2947-** + GS38.0900	22	750	0.55	2475 mNm	5	5

Gearbox	"L"ength
18:1 & 30:1	75.90 mm
60:1 & 105:1	78.80 mm
210:1	81.50 mm
500:1 & 750:1	81.50 mm

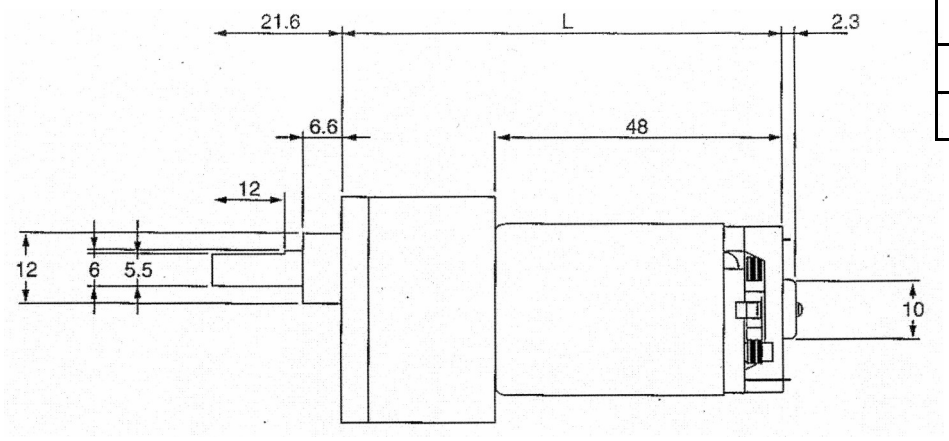

Trident Engineering Limited, Suite 5, Silwood Business Centre, Buckhurst Road, Ascot, Berkshire, SL5 7PW

Tel: 0118 978 6444 Email: sales@tridenteng.co.uk Website: www.tridenteng.co.uk