M9237 + GP32

M9237

Voltage	V	24
Rated Torque	mNm	81.2
Rated Speed	r/min	4,370
Rated Current	mA	2,360
No load Speed	r/min	5,230
No load Current	mA	180
Starting Torque	mNm	
Torque Constant	mNm/A	42.0/A

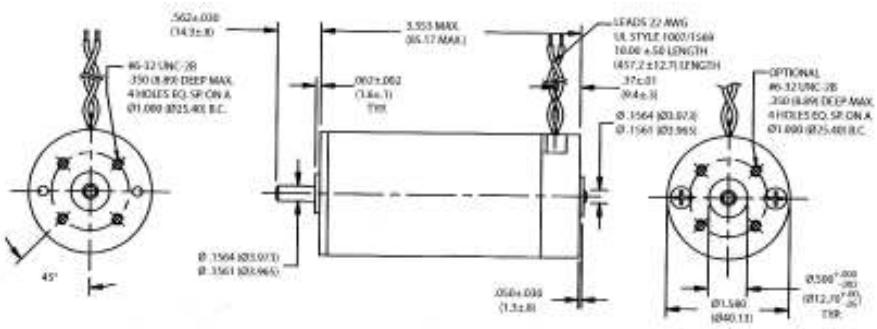

GP32.****

	Ratio	Effic %	Max Torque Cont. (Nm)	Max Torque Inter. (Nm)	L1 (mm)
GP32.0004	4.28:1	80	0.75	1.12	26.60
GP32.0014	14:1	75	2.25	3.37	36.10
GP32.0019	19:1	75	2.25	3.37	36.10
GP32.0071	71:1	70	4.50	6.75	45.60
GP32.0100	100:1	70	4.50	6.75	45.60

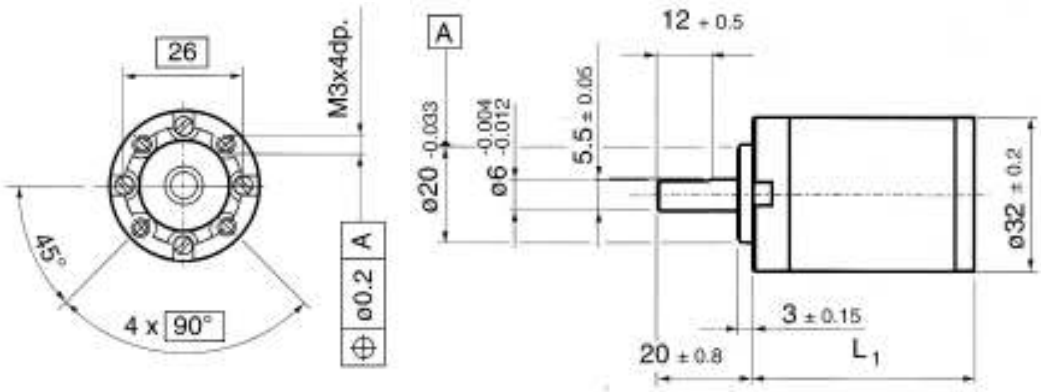

M9237 + GP32.****

	Rated Torque	Ratio	Efficiency	Approx Torque Nm	24v RPM
M9237 + GP32.0004	81.2	4.28	0.80	0.28	1021.03
M9237 + GP32.0014	81.2	14	0.75	0.85	312.14
M9237 + GP32.0019	81.2	19	0.75	1.16	230.00
M9237 + GP32.0071	81.2	71	0.70	4.04	61.55
M9237 + GP32.0100	81.2	100	0.70	5.68	43.70

Trident Engineering Limited, Frederick House, 498 Reading Road, Unit 2, Winnersh, Berkshire, RG41 5EX

Tel: 0118 978 6444 Email: sales@tridenteng.co.uk Website: www.tridenteng.co.uk